Rev.	Date	Description
A	2013/12/06	First Release

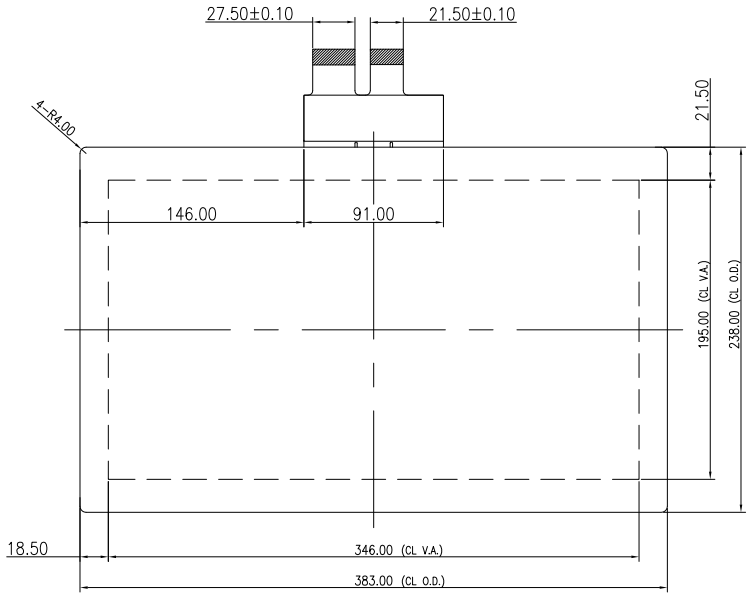

FRONT VIEW

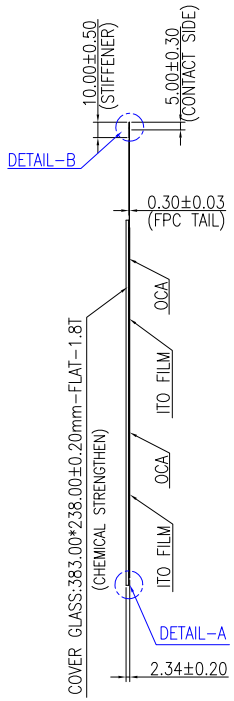

SIDE VIEW

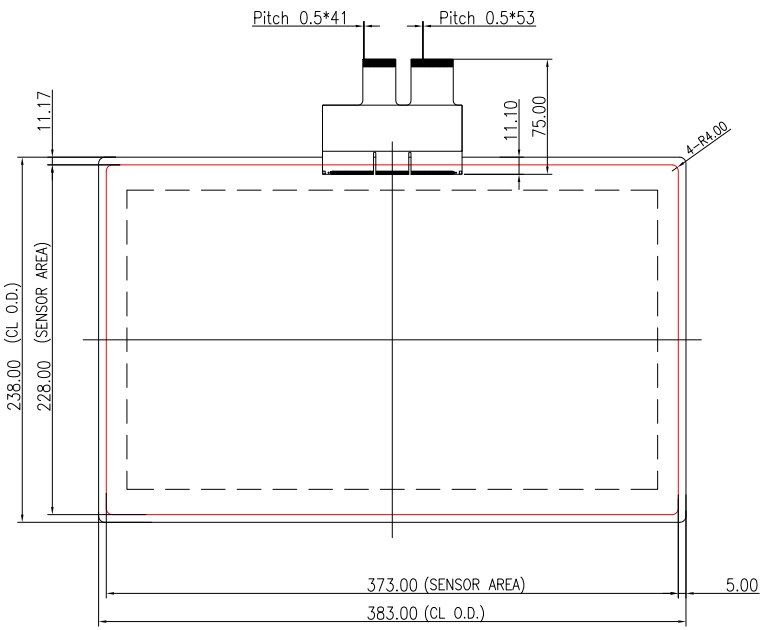

BACK VIEW

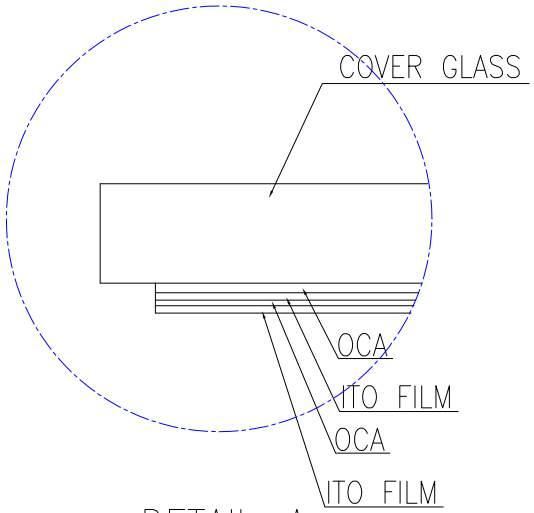

DETAIL-A

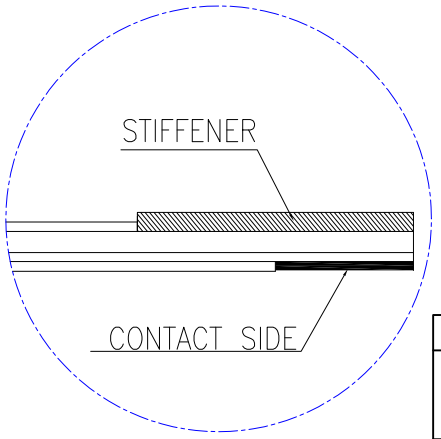

DETAIL-B

CUSTOMER NAME	PROJECTION			
	GENERALI TOLERANCE ±0.2		TPM PART NO.	
	DRWN Miranda	DATE 2013.12.06		
CUSTOMER'S APPROVAL	CHK Gloria	DATE 2013.12.06	TP MODEL/COB	
	APVD CJ Huang	DATE 2013.12.06	UNIT: mm	SHEET 1/1 / REV. A

FR0203-11A3